Appendix 1 APA Group Structure

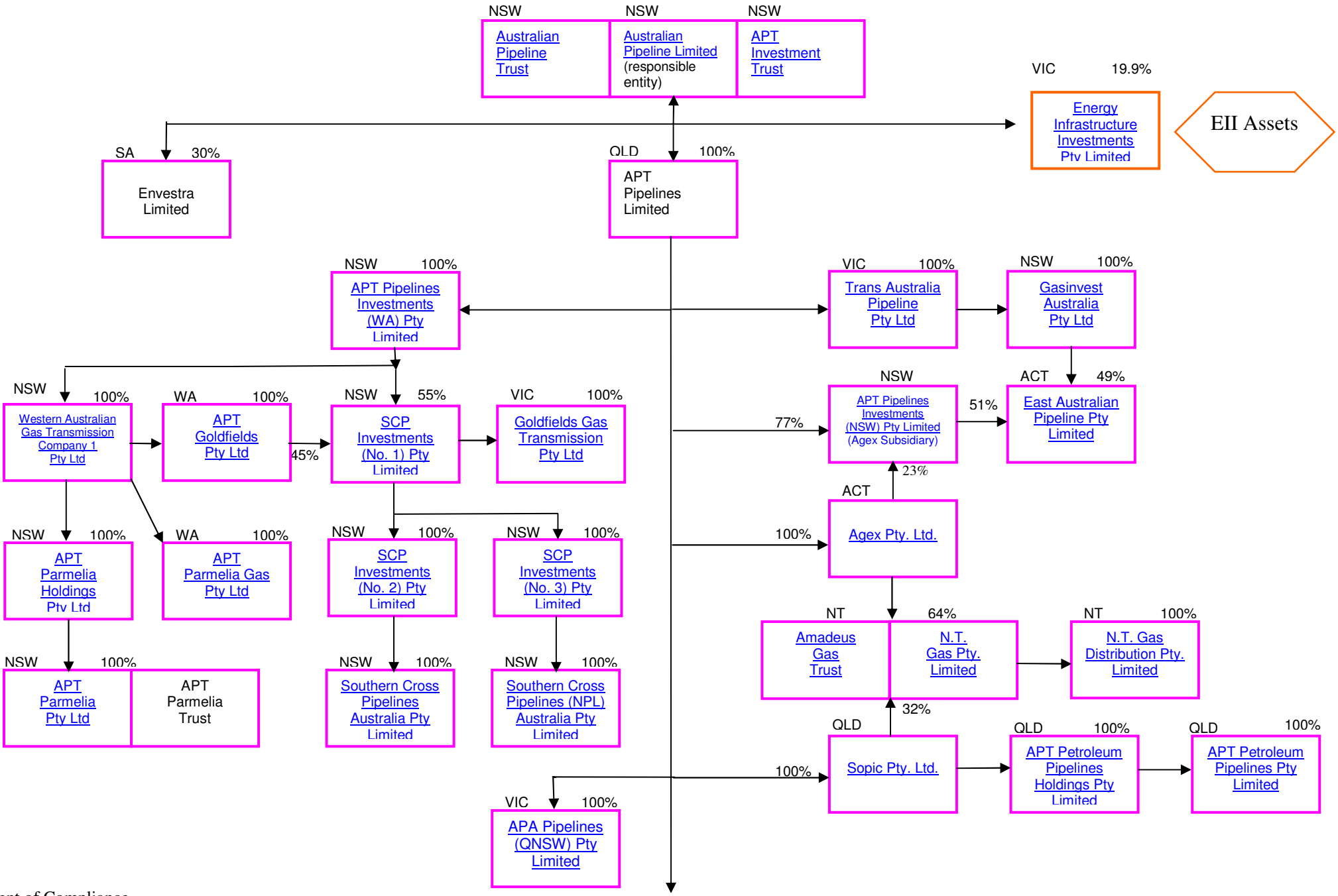
NSW
Australian Pipeline Trust
NSW
Australian Pipeline Limited (responsible entity)
NSW
APT Investment Trust
VIC
19.9%
Energy Infrastructure Investments Pty Limited
EII Assets
SA
30%
Envestra Limited
QLD
100%
APT Pipelines Limited
NSW
100%
APT Pipelines Investments (WA) Pty Limited
VIC
100%
Trans Australia Pipeline Pty Ltd
NSW
100%
Gasinvest Australia Pty Ltd
NSW
100%
Western Australian Gas Transmission Company 1 Pty Ltd
WA
100%
APT Goldfields Pty Ltd
45%
NSW
55%
SCP Investments (No. 1) Pty Limited
VIC
100%
Goldfields Gas Transmission Pty Ltd
77%
NSW
APT Pipelines Investments (NSW) Pty Limited (Agex Subsidiary)
51%
ACT
49%
East Australian Pipeline Pty Limited
23%
ACT
100%
Agex Pty. Ltd.
NSW
100%
APT Parmelia Holdings Pty Ltd
WA
100%
APT Parmelia Gas Pty Ltd
NSW
100%
SCP Investments (No. 2) Pty Limited
NSW
100%
SCP Investments (No. 3) Pty Limited
NT
64%
Amadeus Gas Trust
N.T. Gas Pty. Limited
NT
100%
N.T. Gas Distribution Pty. Limited
NSW
100%
APT Parmelia Pty Ltd
APT Parmelia Trust
NSW
100%
Southern Cross Pipelines Australia Pty Limited
NSW
100%
Southern Cross Pipelines (NPL) Australia Pty Limited
32%
QLD
100%
Sopic Pty. Ltd.
QLD
100%
APT Petroleum Pipelines Holdings Pty Limited
QLD
100%
APT Petroleum Pipelines Pty Limited
VIC
100%
APA Pipelines (QNSW) Pty Limited

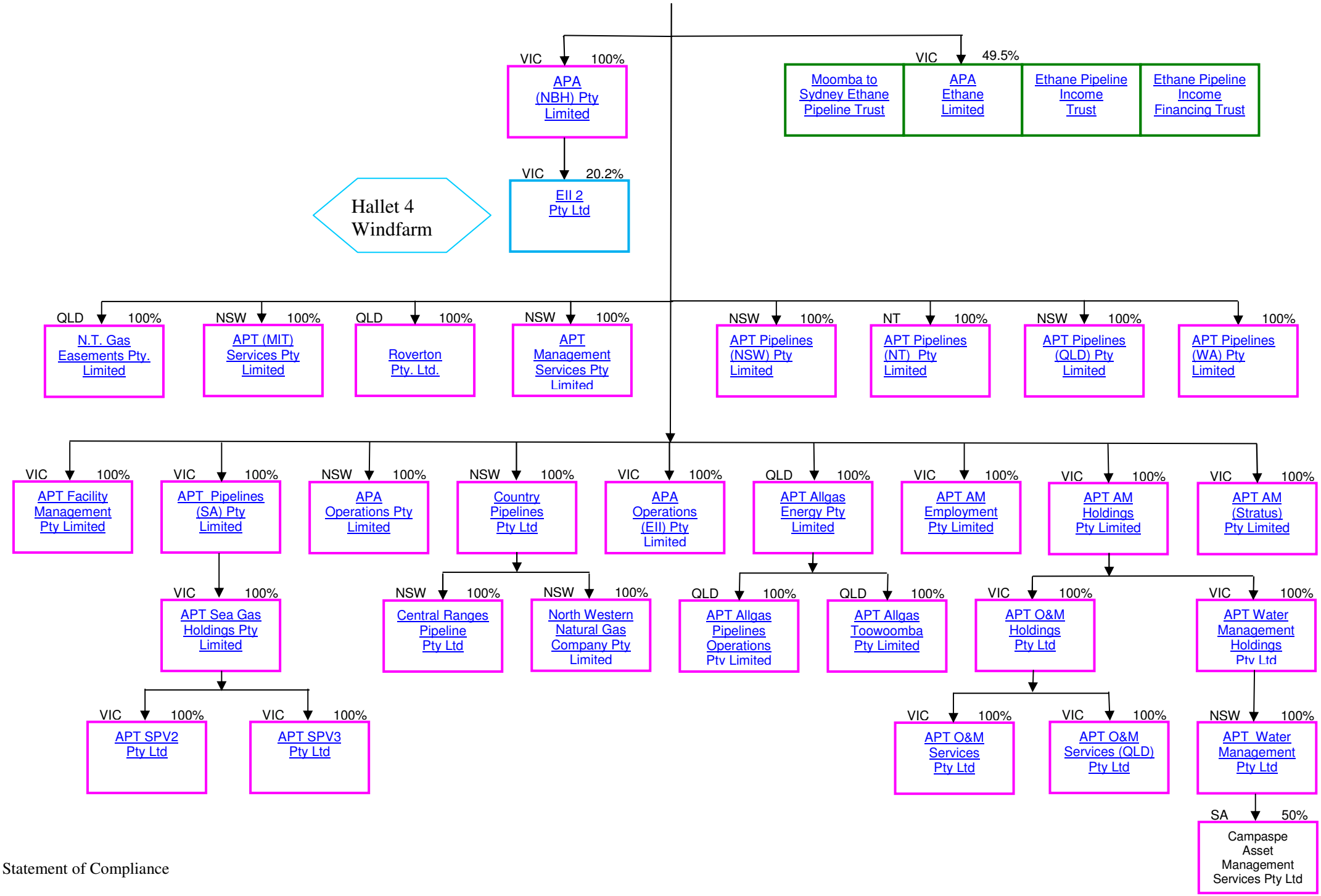
VIC 100%
APA (NBH) Pty Limited
VIC 20.2%
EII 2 Pty Ltd
Hallet 4 Windfarm
VIC 49.5%
Moomba to Sydney Ethane Pipeline Trust
APA Ethane Limited
Ethane Pipeline Income Trust
Ethane Pipeline Income Financing Trust
QLD 100%
N.T. Gas Easements Pty. Limited
NSW 100%
APT (MIT) Services Pty Limited
QLD 100%
Roverton Pty. Ltd.
NSW 100%
APT Management Services Pty Limited
NSW 100%
APT Pipelines (NSW) Pty Limited
NT 100%
APT Pipelines (NT) Pty Limited
NSW 100%
APT Pipelines (QLD) Pty Limited
100%
APT Pipelines (WA) Pty Limited
VIC 100%
APT Facility Management Pty Limited
VIC 100%
APT Pipelines (SA) Pty Limited
NSW 100%
APA Operations Pty Limited
NSW 100%
Country Pipelines Pty Ltd
VIC 100%
APA Operations (EII) Pty Limited
QLD 100%
APT Allgas Energy Pty Limited
VIC 100%
APT AM Employment Pty Limited
VIC 100%
APT AM Holdings Pty Limited
VIC 100%
APT AM (Stratus) Pty Limited
VIC 100%
APT Sea Gas Holdings Pty Limited
NSW 100%
Central Ranges Pipeline Pty Ltd
NSW 100%
North Western Natural Gas Company Pty Limited
QLD 100%
APT Allgas Pipelines Operations Pty Limited
QLD 100%
APT Allgas Toowoomba Pty Limited
VIC 100%
APT O&M Holdings Pty Ltd
VIC 100%
APT Water Management Holdings Pty Ltd
VIC 100%
APT SPV2 Pty Ltd
VIC 100%
APT SPV3 Pty Ltd
VIC 100%
APT O&M Services Pty Ltd
VIC 100%
APT O&M Services (QLD) Pty Ltd
NSW 100%
APT Water Management Pty Ltd
SA 50%
Campaspe Asset Management Services Pty Ltd

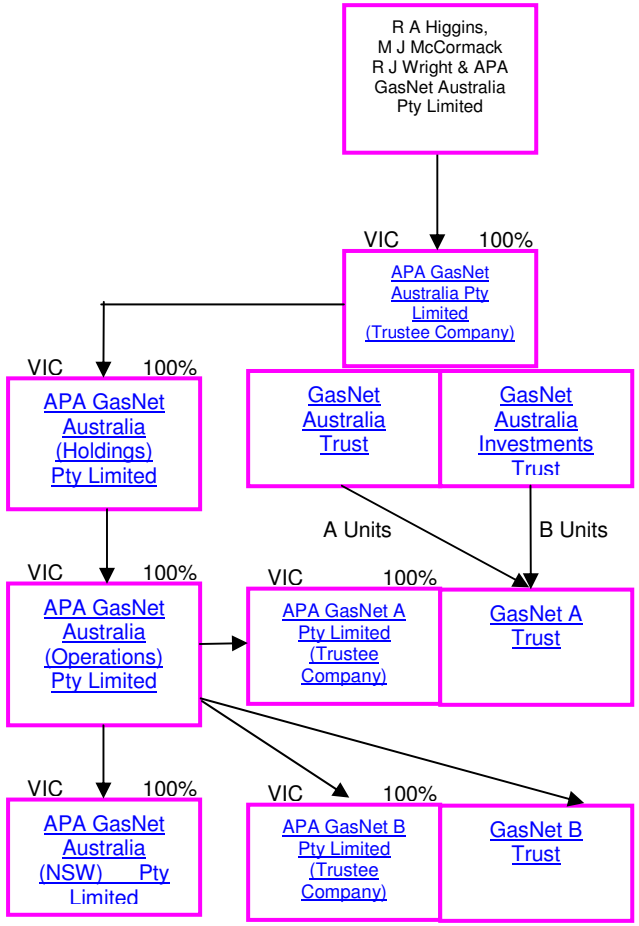
R A Higgins,
M J McCormack
R J Wright & APA
GasNet Australia
Pty Limited
VIC
100%
APA GasNet
Australia Pty
Limited
(Trustee Company)
VIC
100%
APA GasNet
Australia
(Holdings)
Pty Limited
GasNet
Australia
Trust
GasNet
Australia
Investments
Trust
A Units
B Units
VIC
100%
APA GasNet
Australia
(Operations)
Pty Limited
VIC
100%
APA GasNet A
Pty Limited
(Trustee
Company)
GasNet A
Trust
VIC
100%
APA GasNet
Australia
(NSW) Pty
Limited
VIC
100%
APA GasNet B
Pty Limited
(Trustee
Company)
GasNet B
Trust